KEEP/ SCAN

[redacted]

NOT FOR DESIGN

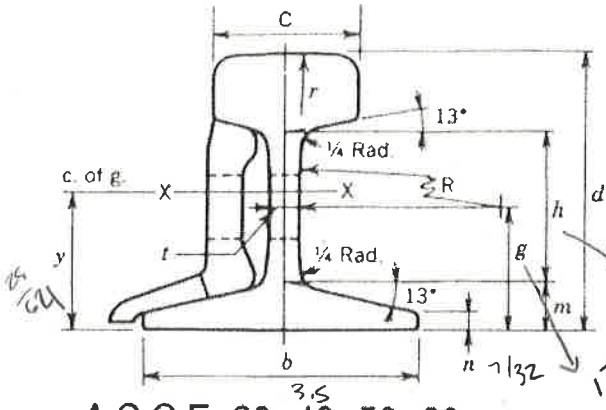

NOTE: PLACE CENTROID (C. OF. G.) AT ORIGIN.

A.S.C.E. 30, 40, 50, 60, 70, 80, 85 & 100 lb.

DIMENSIONS AND PROPERTIES

Type	Classification	Nominal Wt. per Yd.	d	Gage g	Base b	Base m	Base n	Head c	Head r	Web t	Web h	Web R	Properties—Axis X-X Area	I_x	S Hd.	S Bse.	y
		Lb.	In.	In.	In.	In.	In.	In.	In.	In.	In.	In.	In.²	In.⁴	In.³	In.³	In.
ASCE	Light	30	3 1/8	1 25/64	3 1/8	17/32	11/64	1 11/16	12	21/64	1 23/32	12	3.00	4.10	2.55	—	—
ASCE	Light	40	3 1/2	1 71/128	3 1/2	5/8	7/32	1 7/8	12	25/64	1 55/64	12	3.94	6.54	3.59	3.89	1.68
ASCE	Light	50	3 7/8	1 23/32	3 7/8	11/16	1/4	2 1/8	12	7/16	2 1/16	12	4.90	10.1	5.10	—	1.88
ASCE	Light	60	4 1/4	1 115/128	4 1/4	49/64	9/32	2 3/8	12	31/64	2 17/64	12	5.93	14.6	6.64	7.12	2.05

Notes:

1. Unspecified large radius at the top of the rail is .250
2. Unspecified small radii (3X) are .0625
3. Omit dimension *n*

If you last name is from:

A to E

Do 60 lb

F to J

Do 50 lb

L to R

Do 40 lb

S to Z

Do ~~30~~ lb

60